AXIS P33 Network Camera Series – Outdoor models

Fixed domes for any environment with remote focus and zoom

- Exceptional image quality including 5 MP and HDTV
- WDR and Lightfinder
- OptimizedIR
- Remote focus and zoom
- P-Iris control
- IK10 impact-resistant, outdoor-ready models

AXIS P33 Network Cameras constitute a series of indoor and outdoor-ready fixed domes. These cameras are ideal for unobtrusive video surveillance, day and night, in exposed areas such as city surveillance, airports, railway stations, retail stores, office buildings, museums, schools and university campuses.

AXIS P33 Series offers models with exceptional image quality in up to 5 megapixel, including SMPTE-compliant HDTV 720p and 1080p video. AXIS P33 Series provides multiple, individually configurable H.264 and Motion JPEG video streams. The HDTV 720p/1 MP models support Axis' Lightfinder technology, which makes these cameras extremely sensitive to low light. AXIS P3384-VE that additionally supports Wide Dynamic Range – Dynamic Capture, provides outstanding video quality in the most demanding conditions with strong variations in light. The 5 megapixel model, AXIS P3367-VE, can cover a large area with exceptional detail and light sensitivity. All AXIS P33 models support P-Iris control for optimal image clarity.

AXIS P3364-LVE incorporates new long-life LED technology that is highly power-efficient. Adjustable in angle and intensity, the built-in OptimizedIR solution offers easy configuration optimizing for the scene. All AXIS P33 cameras support the remote focus capability that eliminates hands-on focusing at the camera, and remote zoom that allows the camera's angle of view to be optimized.

All AXIS P33 cameras offer digital pan/tilt/zoom and the 2-megapixel, 3-megapixel and 5-megapixel models additionally provide multi-view streaming. The weatherproof AXIS P33-VE/-LVE cameras have low, environmental-friendly power consumption supplied by standard Power over Ethernet (IEEE 802.3af), and operate in a wide temperature range from -40 °C to 55 °C (-40 °F to 131 °F).

Fixed domes designed for efficient installation

Outdoor-ready models of AXIS P33 Series are the perfect choice for a wide range of demanding video applications. AXIS P33 Network Cameras are designed for professional video surveillance with easy and reliable installation in focus.

Outdoor-ready installation for tough climates

The outdoor models of AXIS P33 Series are specially designed for reliable, vandal-resistant and weatherproof installation, with pre-installed heater and fan, and an integrated dehumidifying membrane eliminating any humidity caught in the camera casing during installation. These cameras come with a 5 m (16 ft) Ethernet cable with a pre-mounted, specially designed gasket, enabling flush wall mounting and requiring no additional sealant. A weather shield is also included for effective protection against reflections from sunlight, or build-ups of rain or snow; except for the AXIS P3364-LVE model, for which the shield could interfere with the built-in IR illumination. A wide range of optional mounting kits are available, for example for mounting on a pendant, pole or corner.

Lightfinder technology

The HDTV 720p/1 MP models of AXIS P33 Series incorporate Axis' unique Lightfinder technology. The outstanding light sensitivity, with maintained colors even in very poor lighting conditions, is obtained by a combination of Axis' expertise in image processing, system-on-chip development and selection of the best optical components.

For more on Lightfinder technology, go to:
www.axis.com/corporate/corp/tech_papers.htm

Wide Dynamic Range – Dynamic Capture

AXIS P3384-VE that supports WDR – Dynamic Capture is ideal for surveillance in areas with strong variations in light, for instance in tunnel passages and other areas where the sunlight creates both very bright zones and dark shadows. AXIS P3384-VE enables easy and clear identification of people and objects both in bright and dark areas.

Built-in IR illumination

AXIS P3364-LVE features Axis' OptimizedIR technology based on new, long-life LED technology that is highly power efficient. This results in high-quality, low-noise video also when the environment is completely dark.

P-Iris control

AXIS P33 Series features the advanced precise iris control that comprises a special P-Iris lens, together with dedicated software in the camera, to set the best iris position for optimal depth of field, resolution, image contrast and clarity. Good depth of field implies that objects at different distances from the camera are in focus simultaneously.

For more on P-Iris and iris control, go to:
www.axis.com/corporate/corp/tech_papers.htm

Easy installation

AXIS P33 Network Cameras offer unique installation capabilities including remote focus and zoom. The remote focus feature enables convenient focusing over the network, eliminating the need for hands-on finetuning at the camera. The remote zoom functionality ensures that the camera's angle of view can be optimized for the area to be monitored. The pixel counter assures that the required pixel resolution is met. Thanks to Axis' OptimizedIR technology, AXIS P3364-LVE automatically adapts the illumination angle with the zoom level, which simplifies installation.

Dimensions

1. *AXIS P3364-VE*
   AXIS P3364-LVE
2. *AXIS P3365-VE*
   AXIS P3367-VE
   AXIS P3384-VE

** With weather shield (exception: no weather shield for AXIS P3364-LVE)*

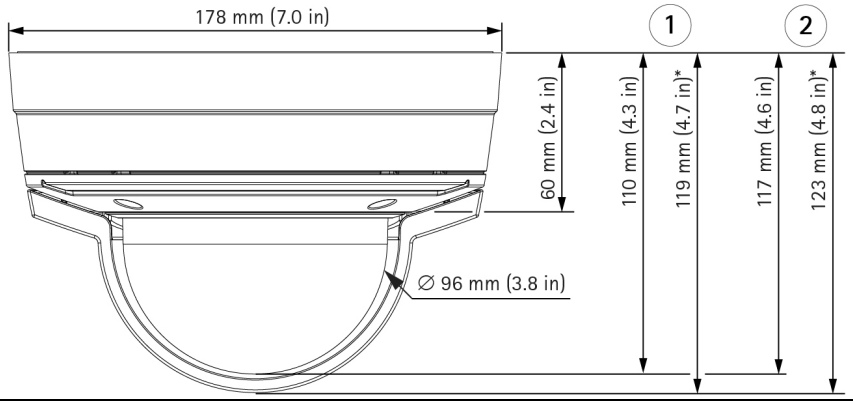

Accessories

1. *Pendant adapter kit including weather shield*
2. *AXIS T91 Mounts*
3. *I/O audio cable, 5 m (16 ft)*
4. *AXIS T90A Illuminators*
5. *Cable shield, optionally including AXIS P33-VE 3/4" NPS adapter*
   For more details on accessories, please visit: www.axis.com/accessories

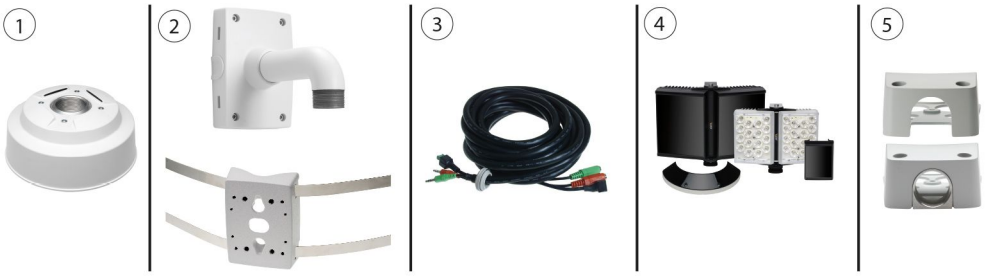

Technical Specifications - AXIS P33 Outdoor models

Models	**AXIS P3364-VE:** 1 MP, Lightfinder **AXIS P3364-LVE:** 1 MP, IR illumination, Lightfinder **AXIS P3384-VE:** 1 MP, WDR - Dynamic Capture, Lightfinder **AXIS P3365-VE:** 2 MP, multi-view streaming **AXIS P3367-VE:** 5 MP, multi-view streaming Note: All models are vandal resistant and support audio and I/O ports 6 mm and 12 mm as suffix refer to lens model

Camera

Image sensor	**AXIS P3364-VE/P3364-LVE/P3384-VE:** Progressive scan RGB CMOS 1/3" **AXIS P3365-VE:** Progressive scan RGB CMOS 1/2.8" **AXIS P3367-VE:** Progressive scan RGB CMOS 1/3.2"
Lens	Varifocal, Remote focus and zoom, P-Iris control, IR corrected, Megapixel resolution **AXIS P3364-VE/P3364-LVE 6 mm:** 2.5-6 mm, 105°-49° view[a], F1.2 **AXIS P3364-VE/P3364-LVE 12 mm:** 3.3-12 mm, 82°-24° view[a], F1.4 **AXIS P3384-VE/P3367-VE:** 3-9 mm, 84°-30° view[a], F1.2 **AXIS P3365-VE:** 3-9 mm, 100°-35° view[a], F1.3
Day and night	Automatically removable infrared-cut filter
Minimum illumination	**AXIS P3364-VE 6 mm:** Color: 0.1 lux, F1.2, B/W: 0.02 lux, F1.2 **AXIS P3364-LVE 6 mm:** Color: 0.12 lux, F1.2, B/W: 0.03 lux, F1.2, 0 lux with IR Illumination on **AXIS P3364-VE 12 mm:** Color: 0.15 lux, F1.4, B/W: 0.03 lux, F1.4 **AXIS P3364-LVE 12 mm:** Color: 0.18 lux, F1.4, B/W: 0.04 lux, F1.4, 0 lux with IR illumination on **AXIS P3384-VE:** Color: 0.5 lux, F1.2, B/W: 0.08 lux, F1.2 with Dynamic Capture Color: 0.15 lux, F1.2, B/W: 0.03 lux, F1.2 with Lightfinder **AXIS P3365-VE:** Color: 0.2 lux, F1.3, B/W: 0.04 lux, F1.3 **AXIS P3367-VE:** Color: 0.2 lux, F1.2, B/W: 0.04 lux, F1.2
Shutter time	**AXIS P3364-VE/P3364-LVE:** 1/24500 s to 2 s **AXIS P3384-VE with Dynamic Capture:** 1/192 s to 1/37 s **AXIS P3384-VE with Lightfinder:** 1/24500 s to 2 s **AXIS P3365-VE:** 1/33500 s to 2 s **AXIS P3367-VE:** 1/28000 s to 2 s
Camera angle adjustment	**AXIS P3364-VE/P3364-LVE:** Pan 360°, Tilt 170°, Rotation 340° **AXIS P3384-VE/P3365-VE/P3367-VE:** Pan 360°, Tilt 160°, Rotation 340°

58953/EN/M5.2/022015

Video

Video compression	H.264 Baseline and Main Profile (MPEG-4 Part 10/AVC), Motion JPEG
Resolutions	**AXIS P3364-VE/P3364-LVE/P3384-VE:** 1280x960[b] (approx. 1.3 MP) to 160x90 **AXIS P3365-VE:** 1920X1080 (2 MP) to 160x90 **AXIS P3367-VE:** 2592x1944 (5 MP) to 160x90
Frame rate	**AXIS P3364-VE/P3364-LVE/P3384-VE/P3365-VE:** 25/30 fps with power line frequency 50/60 Hz **AXIS P3367-VE:** 3 MP capture mode: 20 fps in all resolutions HDTV 1080p (1920x1080) and 2 MP 4:3 (1600x1200) capture modes: 30 fps in all resolutions 5 MP capture mode: 12 fps in all resolutions
Video streaming	Multiple, individually configurable streams in H.264 and Motion JPEG, Controllable frame rate and bandwidth, VBR/CBR H.264
Multi-view streaming	**AXIS P3365-VE/P3367-VE:** Up to 8 individually cropped out view areas **AXIS P3367-VE:** When streaming 4 view areas and 1 overview in VGA resolution, the frame rate is 12 fps per stream (5 MP capture mode) or 20 fps per stream (3 MP capture mode)
Pan/Tilt/Zoom	Digital PTZ **AXIS P3367-VE:** Preset positions, Guard tour
Image settings	Compression, Color, Brightness, Sharpness, Contrast, White balance, Exposure control, Exposure zones, Backlight compensation, Fine tuning of behavior at low light, WDR – Dynamic Contrast, Text and image overlay, Mirroring of images, Privacy mask Rotation: 0°, 90°, 180°, 270°, including Corridor Format **AXIS P3384-VE with Dynamic Capture:** Up to 120 dB (0.5–500,000 lux) depending on scene

Audio

Audio streaming	Two-way audio
Audio compression	AAC LC 8/16 kHz, G.711 PCM 8 kHz, G.726 ADPCM 8 kHz, Configurable bit rate
Audio input/output	External microphone input or line input, Line output

Network

Security	Password protection, IP address filtering, HTTPS[c] encryption, IEEE 802.1X[c] Network access control, Digest authentication, User access log
Supported protocols	IPv4/v6, HTTP, HTTPS[c], SSL/TLS[c], QoS Layer 3 DiffServ, FTP, CIFS/SMB, SMTP, Bonjour, UPnP™, SNMPv1/v2c/v3 (MIB-II), DNS, DynDNS, NTP, RTSP, RTP, TCP, UDP, IGMP, RTCP, ICMP, DHCP, ARP, SOCKS

System integration

Application Programming Interface	Open API for software integration, including VAPIX® and **AXIS Camera Application Platform**, specifications at *www.axis.com* **AXIS Video Hosting System** (AVHS) with One-click Connection ONVIF Profile S, specification available at *www.onvif.org*
Intelligent video	Video motion detection, Active tampering alarm, Audio detection, **AXIS Camera Application Platform** enabling installation of additional applications
Event triggers	Intelligent video, Edge storage events, External input
Event actions	File upload: FTP, HTTP, network share and email Notification: email, HTTP and TCP Video and audio recording to edge storage Pre- and post-alarm video buffering External output activation, Play audio clip **AXIS P3367-VE:** Preset positions, Guard tour
Data streaming	Event data
Built-in installation aids	Remote zoom, Remote focus, Pixel counter **AXIS P3364-LVE:** OptimizedIR with adjustable IR illumination angle and intensity

General

Casing	Polycarbonate transparent dome Aluminum inner camera module with encapsulated electronics IP66- and NEMA 4X-rated, IK10 impact-resistant casing with aluminum base and dehumidifying membrane Color: White NCS S 1002-B. For repainting instructions and impact on warranty, contact your Axis partner
Memory	256 MB RAM, 128 MB Flash **AXIS P3367-VE:** 512 MB RAM, 128 MB Flash
Power	Power over Ethernet IEEE 802.3af/802.3at Type 1 Class 3 **AXIS P3364-VE/P3364-LVE/P3384-VE/P3367-VE:** max. 12.1 W **AXIS P3365-VE:** max. 8.6 W
Connectors	RJ45 10BASE-T/100BASE-TX PoE, Terminal block for 1 alarm input and 1 output, 3.5 mm mic/line in, 3.5 mm line out
IR illumination	**AXIS P3364-LVE:** OptimizedIR with power-efficient, long-life 850 nm IR LEDs with adjustable angle of illumination and intensity. Range of reach up to 30 m (100 ft) depending on scene
Edge storage	SD/SDHC/SDXC slot supporting memory card up to 64 GB (card not included) Support for recording to network share (network-attached storage or file server)
Operating conditions	-40 °C to 55 °C (-40 °F to 131 °F) Humidity 10-100% RH (condensing)
Approvals	EN 55022 Class B, EN 50121-4, IEC 62236-4, EN 55024, EN 61000-6-1, EN 61000-6-2, FCC Part 15 Subpart B Class B, ICES-003 Class B, VCCI Class B, C-tick AS/NZS CISPR 22 Class B, KCC KN 22 Class B, KN 24, IEC/EN/UL 60950-22, EN 50581, IEC/EN 60529 IP66, NEMA 250 Type 4X, IEC 60068-2-1, IEC 60068-2-2, IEC 60068-2-14, IEC 60068-2-27, IEC 60068-2-64, IEC 60068-2-78, IEC/EN 62262 IK10 **AXIS P3364-LVE:** EN 62471
Weight	**AXIS P3364-VE:** 1.5 kg (3.3 lb), with weather shield **AXIS P3364-LVE:** 1.4 kg (3.1 lb), without weather shield **AXIS P3384-VE/P3365-VE/P3367-VE:** 1.7 kg (3.7 lb), with weather shield
Included accessories	Installation Guide, Installation and Management Software CD, Windows decoder 1-user license, Connector kit, Mounting bracket, 5 m (16 ft) network cable with pre-mounted gasket, Resistorx T20 screw driver, Drill hole template **AXIS P3364-VE/P3384-VE/P3365-VE/P3367-VE:** Weather shield, Smoked cover
Video management software	**AXIS Camera Station** and video management software from Axis' Application Development Partners (not included). For more information, see *www.axis.com/products/video/software*
Warranty	Axis 3-year warranty and AXIS Extended Warranty option, see *www.axis.com/warranty*

a. *Horizontal angle of view*
b. *1400x1050 (1.4 MP) scaled resolution available via VAPIX®*
c. *This product includes software developed by the OpenSSL Project for use in the OpenSSL Toolkit (http://www.openssl.org/), and cryptographic software written by Eric Young (eay@cryptsoft.com).*

More information is available at www.axis.com

©2013 - 2015 Axis Communications AB. AXIS COMMUNICATIONS, AXIS, ETRAX, ARTPEC and VAPIX are registered trademarks or trademark applications of Axis AB in various jurisdictions. All other company names and products are trademarks or registered trademarks of their respective companies. We reserve the right to introduce modifications without notice.

AXIS COMMUNICATIONS